k.6405

Female/Female
1/2” - 2” EN 10226-1, ISO 5211, pure PTFE seats, DIN 16722 M3

More and more automation is required at all levels in our society and the k.64 ***RuB*** range is the answer to all needs for reliable actuated ball valve. The line has successfully passed 100,000 cycle life tests and is available in a variety of standard and customized configurations some with special seat design to compensate for wear.

HIGH TEMPERATURE RESISTANCE

Now approved for **HTB** use (Hochtemperaturbeständigkeit) Class C 0,1 (0,1 bar @650°C for at least 30 minutes).

H2 READY: product approved in EU acc.to EN331 (sizes ¼” to 2”) for the 1st, 2nd and 3rd gas families, therefore compatible with hydrogen use up to 50% in the gas mixture, as established in the 1st gas family of the EN437 (ref. G110)

QUALITY
- 24h 100% seal test guaranteed
- Dual sealing system allows valve to be operated in either direction making installation easier
- No metal-to-metal moving parts
- No maintenance ever required
- Silicone-free lubricant on all seals
- Chrome plated brass ball for longer life

BODY
- Hot forged sand blasted, nickel plated brass body and cap sealed with Loctite® or equivalent thread sealant
- Integrated ISO 5211 and DIN 3337 mounting flange for universal connection to actuator
- Finest brass according to EN 12165 and EN 12164 specifications
- Valve length according to DIN 16722 M3

STEM
- Blowout-proof nickel plated brass stem
- Maintenance-free, double FPM O-rings at the stem for maximum safety

SEALING
- Pure PTFE self-lubricating seats with flexible-lip design

THREADS
- EN 10226-1, ISO 228 parallel female by female threads

FLOW
- 100% full port for maximum flow

OPERATING DEVICE
- Integrated sturdy ISO 5211 flange allows direct mounting of electric and pneumatic actuators, with no bracket or coupling required. See ***RuB*** line of electric and pneumatic actuators.

WORKING PRESSURE & TEMPERATURE
- 40 bar (600 PSI) non-shock cold working pressure
- For use with dangerous fluids pressure rating is 5 bar (72 PSI) / **HTB** Class C 0,1
- -40°C to +170°C (-40°F to +350°F)
- **WARNING**: freezing of the fluid in the installation may severely damage the valve
- For use with dangerous fluids temperature rating is -20°C to +60°C (-4°F to +140°F)

PED DIRECTIVE
- Assessment according to Pressure Equipment Directive 2014/68/UE module B+D by ICIM (0425)

APPROVED BY OR IN COMPLIANCE WITH
- DVGW (Germany) – MOP 5 B 0,1
- SVGW (Switzerland)
- RoHS Compliant (EU)
- EAC – Declaration of conformity (Russia, Kazakhstan, Belarus)

NOTE: approvals apply to specific configurations/sizes only.

You can purchase the valve alone or with the ***RuB*** actuator already mounted.

OPTIONS
- Special valve configurations available upon request
- s.64 configuration featuring NPT taper ANSI B.1.20.1 female by female threads, unplated body, reinforced seats and brass or stainless stem and ball
- Rack and pinion pneumatic actuator (spring return or double acting)
- Compact power electric actuator for some sizes
- Manual lockable handle

k.6405 XCEK6405 - 6071

Each user should perform his own tests to find out the suitability for his particular application. BONOMI INDUSTRIES makes no warranty, express or implied, as to the shape, fit or function of a product for any application. Contact us or consult with your supplier for additional information on the suitability of the BONOMI INDUSTRIES products with your specific field of use.

ACTUATION

	Part description	Q.ty	Material
1	Nickel plated body	1	CW617N
2	Ball seat	2	PTFE
3	Chrome plated ball	1	CW617N
4	Nickel plated end-cap	1	CW617N
5	Washer	1	PTFE carbon filled 25%
6	Nickel plated stem O-ring design	1	CW617N
7	O-Ring	2	FPM

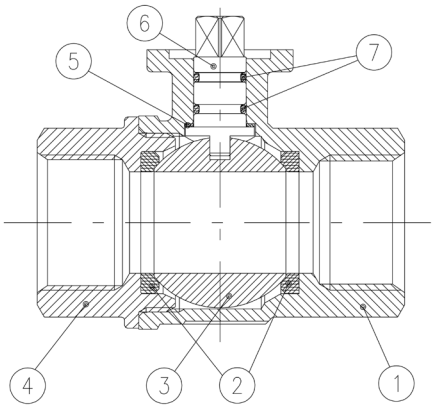

Ball valves are marked CE on body from 1 ¼" to 2" as follow:
CE 0425 cat IIIB+D PS: 5 GAS TS1: -20°C TS2: +60°C

Compliant to CE 2014/68/UE product Equipment category III Module B+D

Code	S64D05	S64E05	S64F05	S64G05	S64H05	S64I05
D (Size)	1/2"	3/4"	1"	1 ¼"	1 ½"	2"
DN (mm)	15	20	25	32	40	50
I (mm)	16.5	19	22.5	25	26	29
L (mm)	75	80	90	110	120	140
G (mm)	30.5	37	45.5	52	59	67.5
H (mm)	31	38.5	42.5	55.5	62	69
CH (mm)	27	32	41	50	55	70
ØA (mm)	36	36	36	50	50	50
□B (mm)	9	9	9	11	11	14
C (mm)	5.6	5.6	5.6	6.6	6.6	6.6
E (mm)	25	25	25	35	35	35
F (mm)	7.5	8.5	8.5	10	10	14.5
Flange connection DIN ISO 522 DIN 3337	F03	F03	F03	F05	F05	F05
Kv (m^3/h)	28	60	100	155	245	290

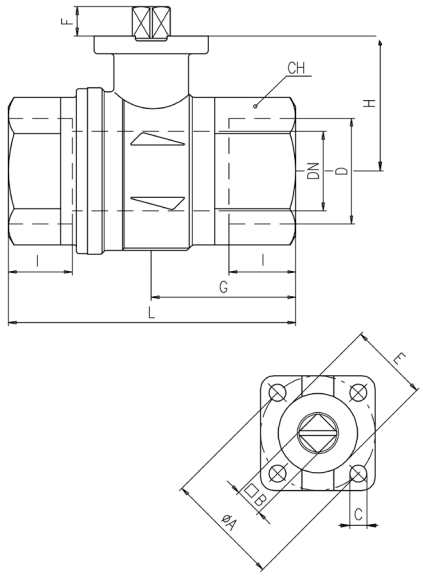

TORQUE FOR ACTUATOR SIZING N.M

Delta P -->	0÷15 bar		40 bar	
Valve size	to open	to close	to open	to close
1/2"	3,2	2,4	3,2	2,4
3/4"	4,6	3,5	4,6	3,5
1"	11	8,2	11	8,2
1 ¼"	16	14,4	16	14,4
1 ½"	28,2	25,4	31	28
2"	38,9	35	49,5	44,5

TORQUE CORRECTION FACTORS

Valve torque can vary according to operating frequency, temperature and friction characteristics of the media.
If media has more or less friction than water, multiply torque by the following factors:

Lubricating oils or liquids	0.8
Dry gases, natural gas	1.5
Slurries or liquids bearing abrasive particles	1.5÷2.5

PRESSURE-TEMPERATURE CHART

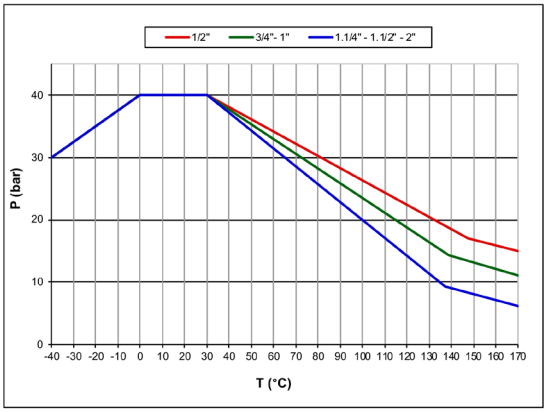
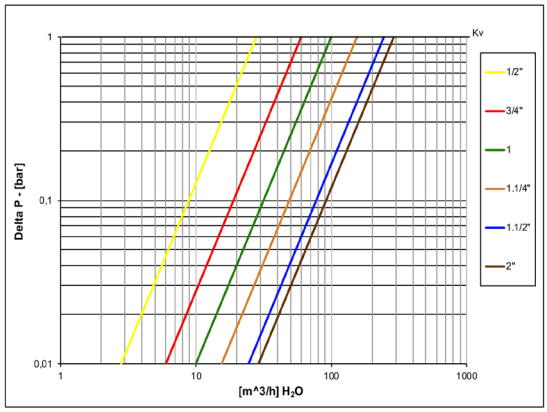
PRESSURE DROP CHART