C-Tork Actuator

Compact lightweight electric actuator

The CT electric actuators are designed to drive ball and butterfly valves with ISO5211 mounting pad, providing a quarter turn motion.
In combination with ***RuB*** valves are used in wastewater treatment plants, power plants, refineries, mining processes, food factories and in the fluid automated control in HVAC.

The CT family provides the following output torques:

Model	Nominal Torque
CT1	8 Nm (71 lb-in)
CT2	11 Nm (97.5 lb-in)
CT3	22 Nm (195 lb-in)
CT4	40 Nm (354 lb-in)

2 YEARS WARRANTY

Technical features & benefits:

- **Direct ISO 5211 mount on valves.**
  Requires no separate linkage because the CT Series Actuators (CT2, CT3 & CT4) are ready for direct attachment to ISO5211 mounting pad.
- **Compact package with perfect shaft alignment.**
  Smaller actuator footprint enables installation in confined spaces; direct mount on ball valves reduces the mounting space requirement.
- **Several voltage ratings available.**
  Available with the most common power supplies around the globe.
- **Fire retardant plastic with high IP ratings enclosure.**
  Provides a high degree of protection from dust, splashing water, rough handling and tough environments.
- **Auxiliary Switches.**
  Provides line voltage capable switch up to 1 A Resistive.
- **Special models available.**
  The CT family fits the customer needs extending the application coverage on request.

Key Codes:

For available options see single model sheet.

CT	X	X	X	X	X	X		
							Option:	R = Anti-condensation Resistance***
								FO = Failsafe Valve Open
								FC = Failsafe Valve Close
							Auxiliary Switches:	0 = No Micro
								1 = 1 Aux. Switch
								2 = 2 Aux. Switches
							Manual Override:	M = Manual Override
								N = No Manual
							Control Type:	A = 2 Points
								B = 3 Points
								C = 2 and 3 Points
								D = Prop. 0 - 10 Vdc
								E = Prop. 2 - 10 Vdc
								F = Prop. 0 - 20 mA
								G = Prop. 4 - 20 mA
							Power Supply:	A = 230Vac 50/60 Hz *
								B = 110Vac 50/60 Hz *
								C = 24Vac 50/60 Hz *
								D = 24Vdc
								E = 12Vdc
								F = 24Vac/dc
								G = 100 - 230Vac
								H = 230Vac 60 Hz **
								I = 110Vac 60Hz **
								L = 24Vac 60Hz **
							Model:	CT1 = 8Nm (71 lb-in)
								CT2 = 11Nm (97.5 lb-in)
								CT3 = 22Nm (195 lb-in)
								CT4 = 40Nm (354 lb-in)

Note: * Not valid for CT4 (50 Hz only), ** Valid for CT4 only, *** Not available for CT1

Ask for additional information on the whole range of **BONOMI** INDUSTRIES products and consult with your supplier for special applications.

CT1 - 8Nm (71 lb-in)

Ordering Codes

Code	Power supply	Control Type	Running time (0°-90°)	Feedback type
CT1AAN1	230 Vac 50/60 Hz	2 Points	45 sec @ 50Hz 38 sec @ 60Hz	1 microswitch opened position & 1 output phase opened position
CT1BAN1	110 Vac 50/60 Hz	2 Points	45 sec @ 50Hz 38 sec @ 60Hz	
CT1CAN1	24 Vac 50/60 Hz	2 Points	45 sec @ 50Hz 38 sec @ 60Hz	
CT1ABN1	230 Vac 50/60 Hz	3 points	35 sec @ 50Hz 30 sec @ 60Hz	
CT1BBN1	110 Vac 50/60 Hz	3 points	35 sec @ 50Hz 30 sec @ 60Hz	
CT1CBN1	24 Vac 50/60 Hz	3 points	35 sec @ 50Hz 30 sec @ 60Hz	
CT1DCN0	24V DC	2/3 Points	60 sec.	2 output phases
CT1FDN0	24V DC / AC ± 20% 50/60 Hz	Modulating 0-10Vdc	60 sec.	2 -10 Vdc

Optional models on request:

- 5Nm with 15 sec running time, Vac only
- Vdc 2/3 points 30 sec running time
- 12 Vdc power supply, 2/3 points 60 secs running time
- Different Input signal on modulating: 0(2)-10 Vdc, 0(4)-20 mA
- Modbus Communication (only with 24V AC/DC power supply)
- On/Off 3 positions (0°, 45° and 90°) (only with 12/24 V DC power supply)

Dimensions mm (inches)

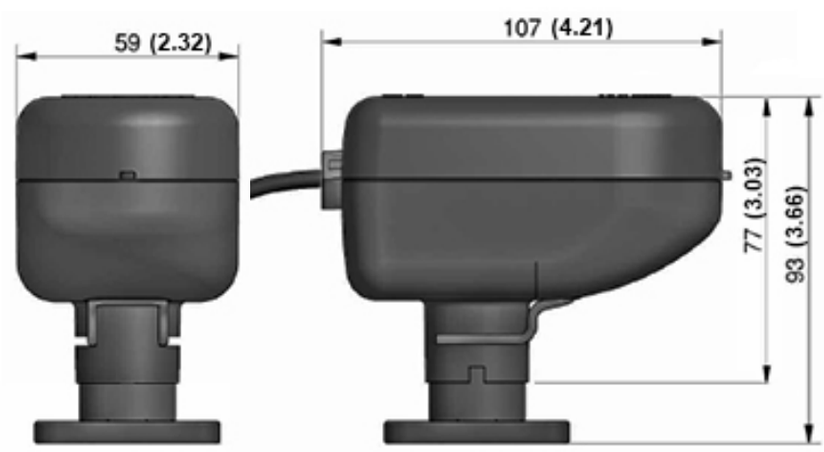

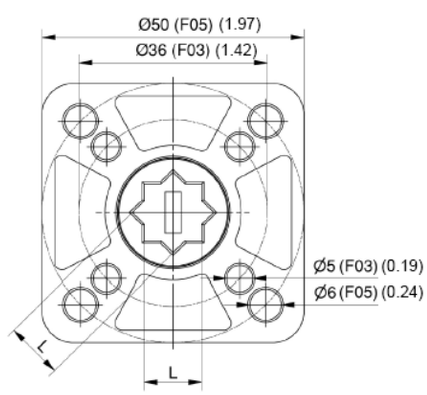

ISO 5211	L
F03	9 with adapter (0.35)
F05	11 (0.43)

Wiring diagrams

Vac models 2 points control

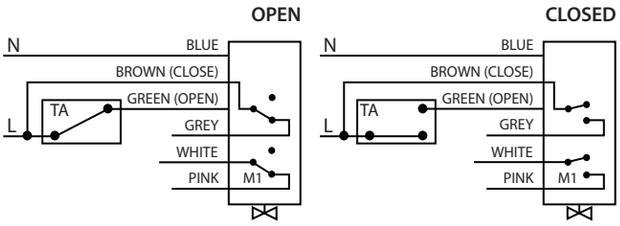

Vac models 3 points control

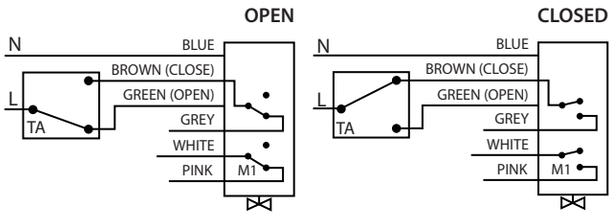

Vdc models 2 points control

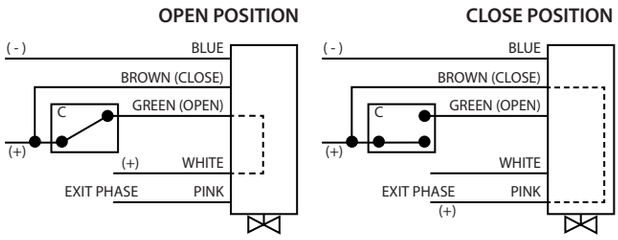

Vdc models 3 points control

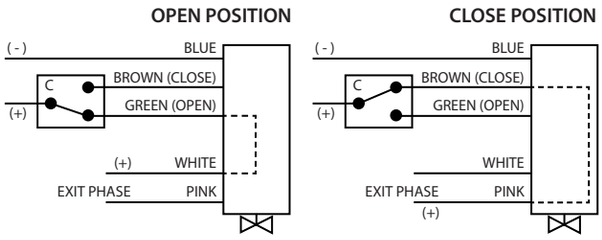

Proportional models 0-20mA / 4-20mA

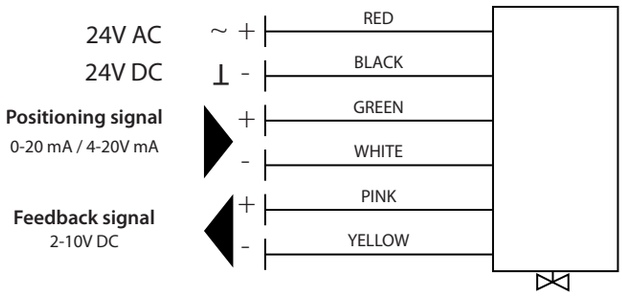

Proportional models 0-10V DC / 2-10V DC

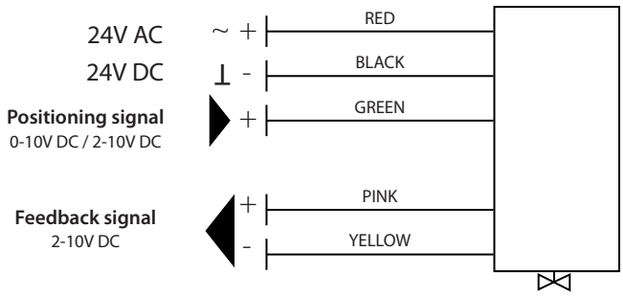

Technical specification

	2 points Vac	3 points Vac	2/3 points Vdc	Modulating
Position indicator	Rotating arrow, indicating the position of the ball			
Power supply	230 V - 50/60 Hz		24Vdc	24V DC / AC ± 20% 50/60 Hz
	24 V - 50/60 Hz			
	110 V - 50/60 Hz		12Vdc	
Power cable length	80 cm (31.5 inches) (other sizes on request)			
Operating time (90°) and related starting torque	45 sec @ 50Hz 38 sec @ 60Hz	35 sec @ 50Hz 30 sec @ 60Hz	60 sec	60 sec
Absorbed power	3.9 VA		2 VA	3.5 W
Electrical capacity of the additional microswitch	1 A resistive - 250V		Not available	
Maximum noise (1 meter away)	40 dB (A)			
Operating ambient temperature	+5 °C ÷ +50°C (41°F ÷ 122°F)			
Degree of protection	IP 54 (Equivalent to NEMA3)			
Insulation class	II - double insulation ⧈			
Outer shell material	Polyamide PA 6 - 30% glass fibers			
Certification	CE			

CT2 - 11Nm (97.5 lb-in)

Ordering Codes

Code	Power supply	Control Type	Running time (0°-90°)	Feedback type
CT2ACM2	230 Vac - 50/60 Hz	2/3 Points	35 sec @ 50Hz 30 sec @ 60Hz	2 x Free auxiliary switches
CT2BCM2	110 Vac - 50/60 Hz	2/3 Points	35 sec @ 50Hz 30 sec @ 60Hz	
CT2CCM2	24 Vac - 50/60 Hz	2/3 Points	35 sec @ 50Hz 30 sec @ 60Hz	
CT2DCN2	24V DC	2/3 Points	12 sec.	
CT2ADN0	230 Vac - 50/60 Hz	Proportional 0-10V	30 sec	2 x Free auxiliary switches 2 -10 Vdc
CT2FDN0	24V DC / AC ± 10% 50/60 Hz	Proportional 0-10V	30 sec.	
CT2GCM2FC	100-230 Vac	2/3 Points fail safe close	15 sec.	

Optional models on request:

- 12 Vdc power supply
- Optional speed: - Vac only : 12 sec or 4 sec (5Nm)
  - Vdc only : 8 sec and 5 sec (11Nm); 3 sec (8Nm); 1 sec (5Nm)
- Proportional models: 2-10 Vdc, 0(4)-20 mA, Modbus
- Electronic fail safe (see pag 15)

Dimensions mm (inches)

Vac models

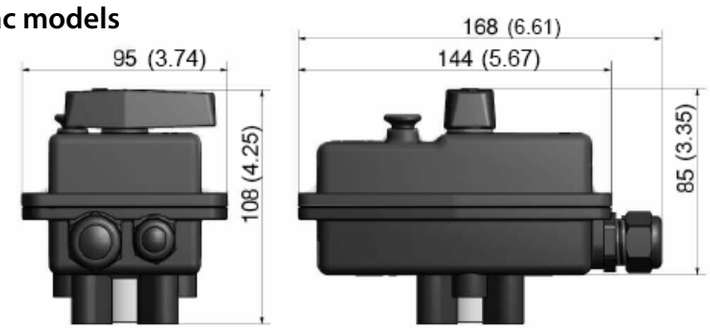

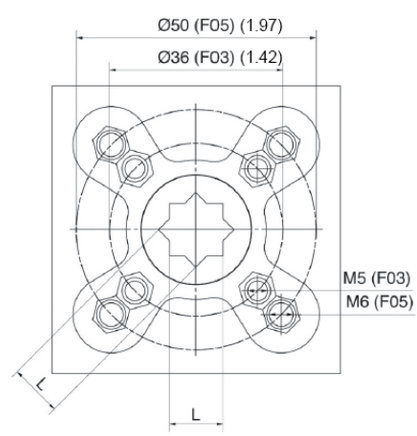

Vdc models

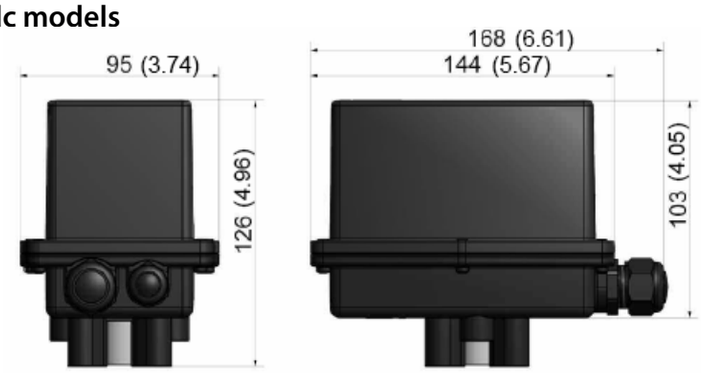

ISO 5211	L
F03	9 with adapter (0.35)
F05	11 (0.43)

Wiring diagrams

2 points control

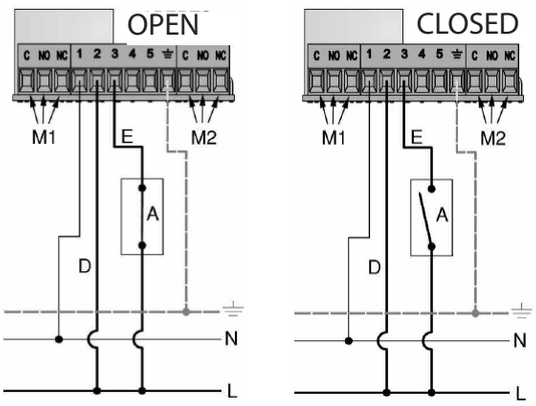

3 points control

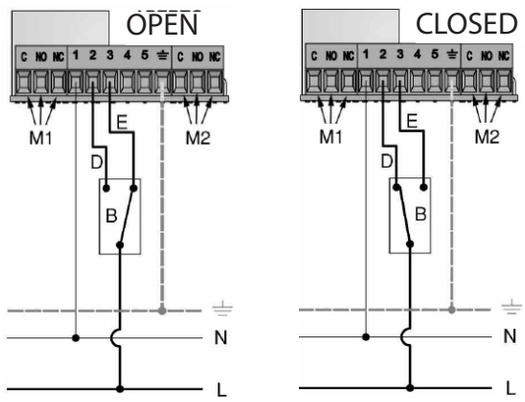

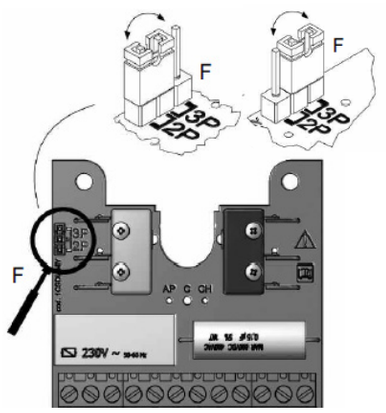

Vac models: Move the jumper to have the desired electrical connection.
Vdc models: No jumper change is needed

Auxiliary switches

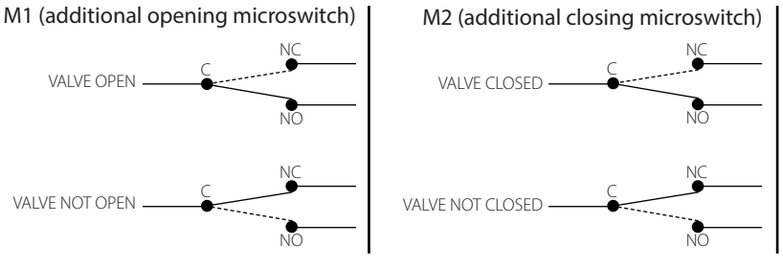

Proportional control

1 Power Cord

Blue	~	12V DC
Brown	~	24V AC/DC
Black	~	100...240V AC*
Green - Yellow	⏚	

***ELECTRICAL POWER SUPPLY ACCORDING TO THE SELECTED VERSION**

FUSE FAST 100 mA

2 Signal Cable

White	GND
Pink	▶ Feedback 2/10V
Grey	◀ PWM1 / PWM2
Green	◀ 0(2)...10V / 0(4)...20mA
Orange	RS 485 L+ (Modbus-RTU **)
Yellow	RS 485 L- (Modbus-RTU **)
Blue	MICRO AUX
Brown	MICRO AUX
Red	MICRO AUX
Violet	MICRO AUX
Black	MICRO AUX
Light blue	MICRO AUX

** only for MODBUS version

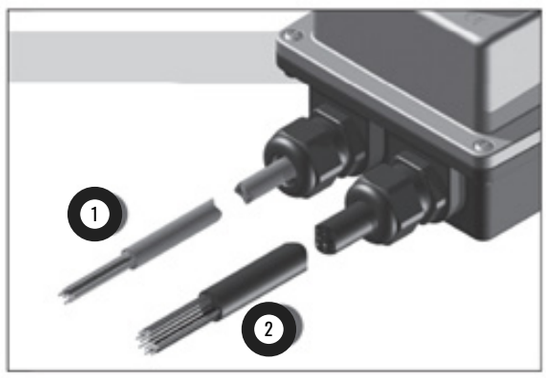

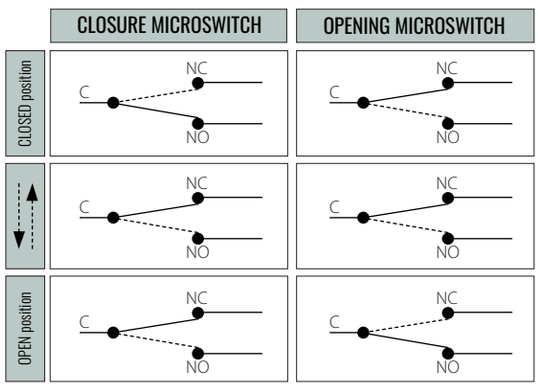

AUXILIARIES

OPENING	C	BROWN
	NC	BLUE
	NO	RED
CLOSING	C	BLACK
	NC	VIOLET
	NO	LIGHT BLUE

Technical specification

	ALL IN ONE - 2/3 points Vac	Proportional	Fail safe
Position indicator and manual override	Manual lever with arrow indicating the position of the ball (not available for Vdc models)		
Power supply	230 V - 50/60 Hz	230 Vac - 50/60 Hz	100-230 Vac - 50/60 Hz
	110 V - 50/60 Hz	24V Vdc / Vac ± 10% 50/60 Hz	
	24 V - 50/60 Hz		
	24 Vdc		
	12 Vdc		
Electric connections	Via terminal board inside the actuator		
Operating time (90°)	35 sec @ 50Hz	30 sec	15 sec (20 sec fail safe)
	30 sec @ 60Hz		
	12 sec Vdc		
Absorbed power	7,5 VA (Vac 30/35 sec)	10W	10W
	13 VA (Vac 1/12 sec)		
	1A (24 Vdc)		
	1,5A (12 Vdc)		
Maximum current supported by the additional microswitches	1 A resistive	max 30Vdc - 0,1 A resistive	max 30Vdc - 0,1 A resistive
Maximum noise (1 meter away)	35 dB (A) standard version	45 dB (A)	45 dB (A)
	47 dB (A) Vdc standard version		
Operating ambient temperature	-10 °C ÷ +50°C (14°F ÷ 122°F)		
Degree of protection	IP 67 (Equivalent to NEMA6)		
Outer case	Characterized by a ribbed shape made of glass-filled "polyarylamide" technopolymer, particularly robust and impermeable to humidity		
Certification	CE		

CT3 - 22Nm (195 lb-in)

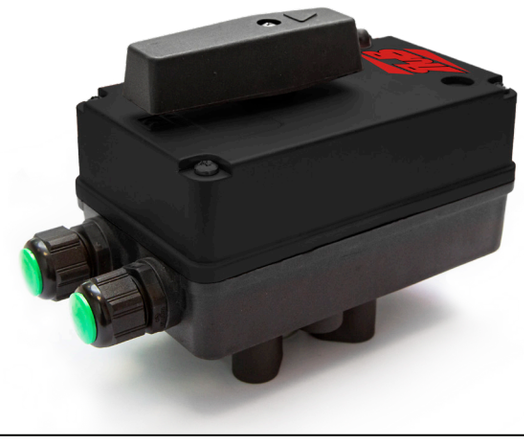

Ordering Codes

Code	Power supply	Control Type	Running time (0°-90°)	Feedback type
CT3ACM2	230 Vac - 50/60 Hz	2/3 Points	45 sec @ 50Hz 38 sec @ 60Hz	2 x Free auxiliary switches
CT3BCM2	110 Vac - 50/60 Hz	2/3 Points	45 sec @ 50Hz 38 sec @ 60Hz	
CT3CCM2	24 Vac - 50/60 Hz	2/3 Points	45 sec @ 50Hz 38 sec @ 60Hz	
CT3DCN2	24V DC	2/3 Points	30 sec.	
CT3ADN0	230 Vac - 50/60 Hz	Proportional 0-10V	35 sec @ 60Hz	2 x Free auxiliary switches 2 -10 Vdc
CT3FDN0	24V DC / AC ± 20% 50/60 Hz	Proportional 0-10V	30 sec.	

Optional models on request:

- 12 Vdc power supply
- Optional speed: - Vac only : 9 sec
  - Vdc only: 10 sec
- Proportional models: 2-10 Vdc, 0(4)-20 mA, Modbus
- Electronic fail safe (see pag 15)

Dimensions mm (inches)

Vac models

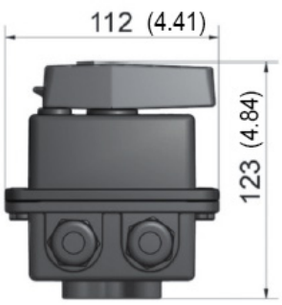

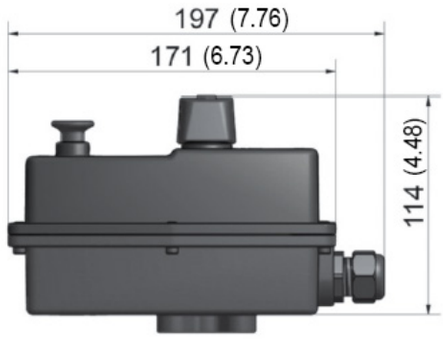

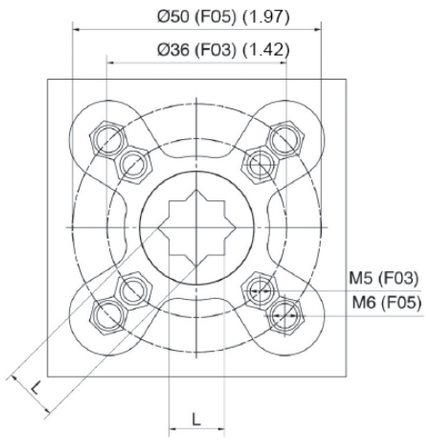

ISO 5211	L
F03	9 with adapter (0.35)
F05	11 (0.43)

Vdc models

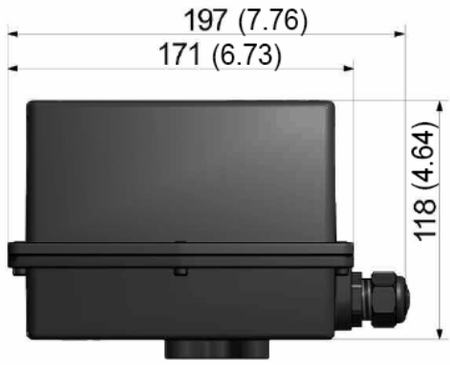

Wiring diagrams

2 points control

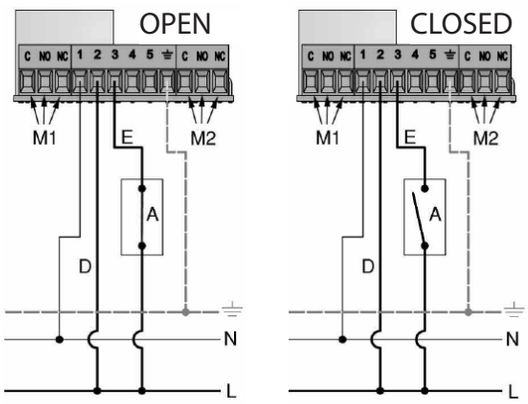

3 points control

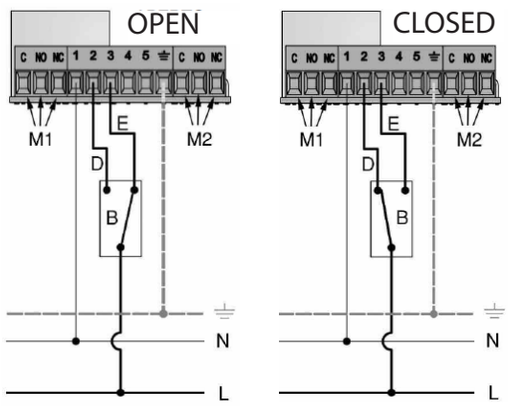

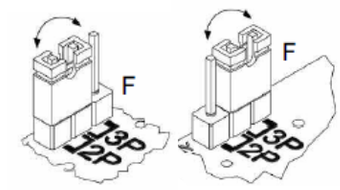

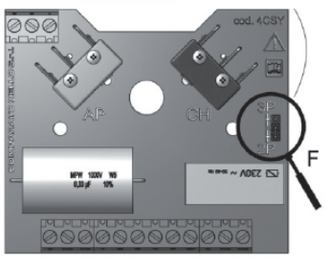

Vac models: Move the jumper to have the desired electrical connection.
Vdc models: No jumper change is needed

Auxiliary switches

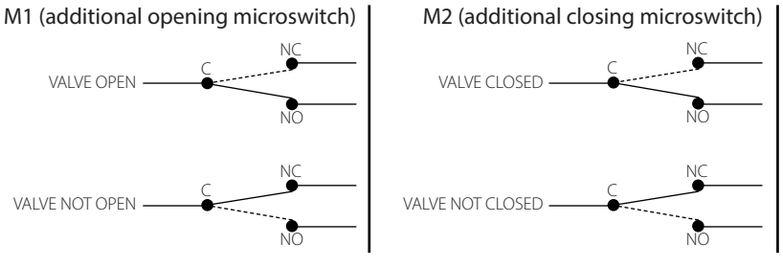

Proportional control

1 Power Cord

Blue	~	12V DC
Brown	~	24V AC/DC
Black	~	100...240V AC*
Green - Yellow	⏚	

***ELECTRICAL POWER SUPPLY ACCORDING TO THE SELECTED VERSION**

FUSE FAST 100 mA

2 Signal Cable

White	GND
Pink	▶ Feedback 2/10V
Grey	◀ PWM1 / PWM2
Green	◀ 0(2)...10V / 0(4)...20mA
Orange	RS 485 L+ (Modbus-RTU **)
Yellow	RS 485 L- (Modbus-RTU **)
Blue	MICRO AUX
Brown	MICRO AUX
Red	MICRO AUX
Violet	MICRO AUX
Black	MICRO AUX
Light blue	MICRO AUX

** only for MODBUS version

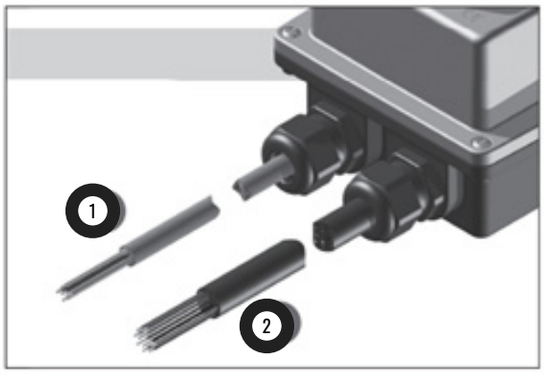

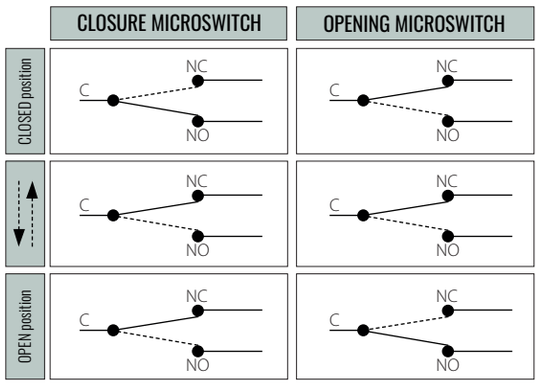

AUXILIARIES

OPENING	C	BLACK
	NC	LIGHT BLUE
	NO	VIOLET
CLOSING	C	BROWN
	NC	RED
	NO	BLUE

Technical specification

	ALL IN ONE - 2/3 points Vac	Proportional
Position indicator and manual override	Manual lever with arrow indicating the position of the ball (not available for Vdc models)	
Power supply	230 V - 50/60 Hz	230 Vac - 50/60 Hz
	110 V - 50/60 Hz	24V Vdc / Vac ± 10% 50/60 Hz
	24 V - 50/60 Hz	
	24 Vdc	
Electric connections	Via terminal board inside the actuator	
Operating time (90°)	45 sec @ 50Hz Vac	35 sec Vac 30 sec Vdc
	38 sec @ 60Hz Vac	
	30 sec Vdc	
Absorbed power	24 VA (Vac)	25 W
	1A (24 Vdc)	
Maximum current supported by the additional microswitches	1 A resistive	max 30Vdc - 0,1 A resistive
Maximum noise (1 meter away)	42 dB (A) Vac standard version	60 dB (A)
	52 dB (A) Vdc standard version	
Operating ambient temperature	-10 °C ÷ +50°C (14°F ÷ 122°F)	
Degree of protection	IP 67 (Equivalent to NEMA6)	
Outer case	Characterized by a ribbed shape made of glass-filled "polyarylamide" technopolymer, particularly robust and impermeable to humidity	
Certification	CE	

CT4 - 40Nm (354 lb-in)

Ordering Codes

Code	Power supply	Control Type	Running time (0°-90°)	Feedback type
CT4ACM2	230 Vac 50 Hz	2/3 Points	55 sec.	2 x Free auxiliary switches
CT4BCM2	110 Vac 50 Hz	2/3 Points	55 sec.	
CT4CCM2	24 Vac 50 Hz	2/3 Points	55 sec.	
CT4HCM2	230 Vac 60Hz	2/3 Points	45 sec.	
CT4ICM2	110 Vac 60Hz	2/3 Points	45 sec.	
CT4LCM2	24 Vac 60Hz	2/3 Points	45 sec.	
CT4HDN0	230 Vac - 50/60 Hz	Proportional 0-10V	30 sec @ 60Hz	2 x Free auxiliary switches 2 -10 Vdc
CT4FDN0	24V DC / AC ± 20% 50/60 Hz	Proportional 0-10V	30 sec.	

Optional models on request:

- 24Vdc and 12 Vdc power supply
- Optional speed: - Vac only : 14 sec and 32 sec
- Proportional models: 2-10 Vdc, 0(4)-20 mA, Modbus
- Electronic fail safe (see pag 15)

Dimensions mm (inches)

Vac models

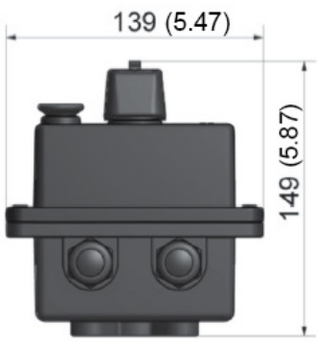

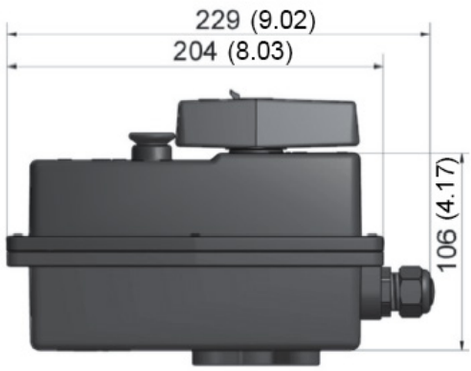

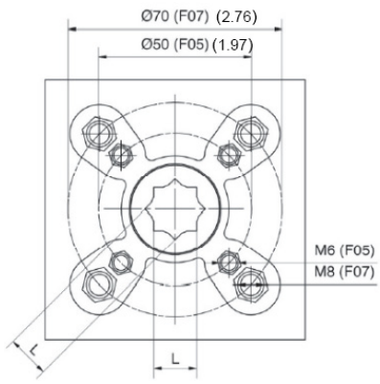

ISO 5211	L
F05	11 with adapter (0.43)
F07	14 (0.55)

Wiring diagrams

2 points control

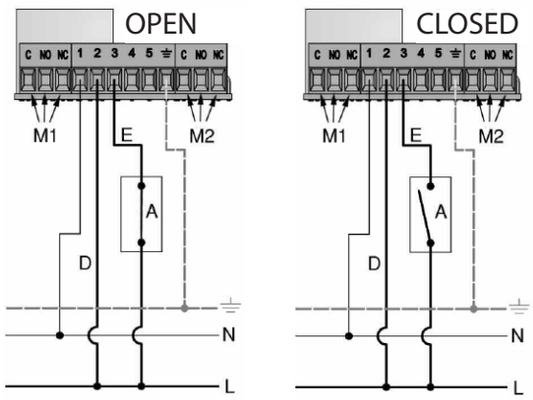

3 points control

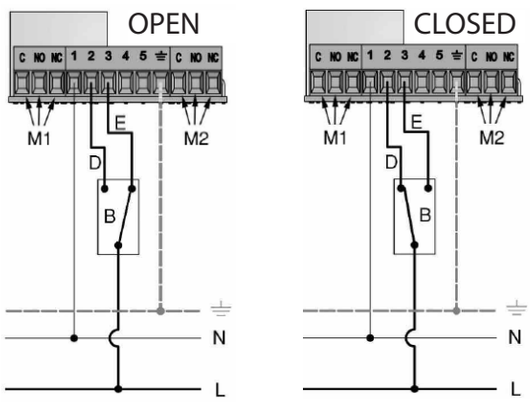

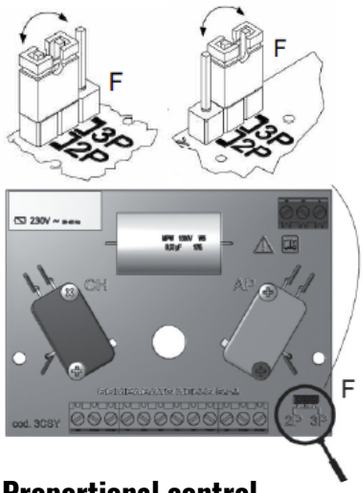

Vac models: Move the jumper to have the desired electrical connection.

Auxiliary switches

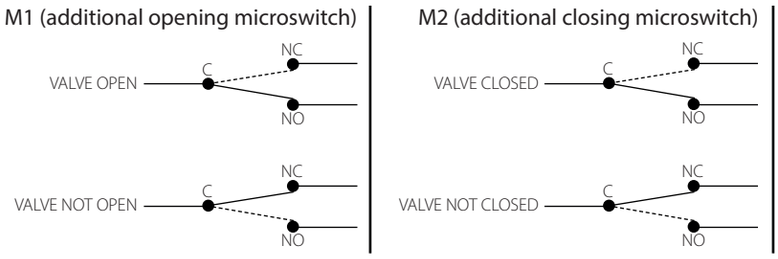

Proportional control

1 Power Cord

Blue	⏚	12V DC
Brown	~ +	24V AC/DC
Black	~ +	100...240V AC*
Green - Yellow	⏚	

***ELECTRICAL POWER SUPPLY ACCORDING TO THE SELECTED VERSION**

FUSE FAST 100 mA ⚠

2 Signal Cable

White	GND
Pink	▶ Feedback 2/10V
Grey	◀ PWM1 / PWM2
Green	◀ 0(2)...10V / 0(4)...20mA
Orange	RS 485 L+ (Modbus-RTU **)
Yellow	RS 485 L- (Modbus-RTU **)
Blue	MICRO AUX
Brown	MICRO AUX
Red	MICRO AUX
Violet	MICRO AUX
Black	MICRO AUX
Light blue	MICRO AUX

** only for MODBUS version

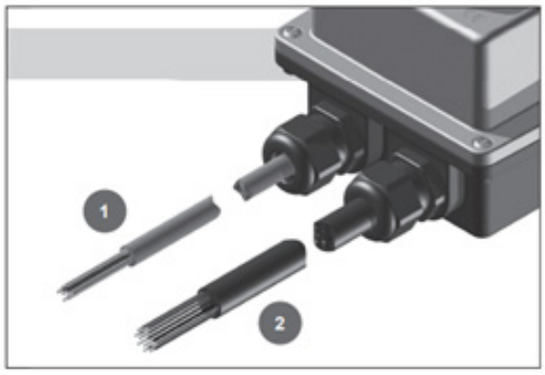

AUXILIARIES

OPENING	C	BLACK
	NC	LIGHT BLUE
	NO	VIOLET
CLOSING	C	BROWN
	NC	RED
	NO	BLUE

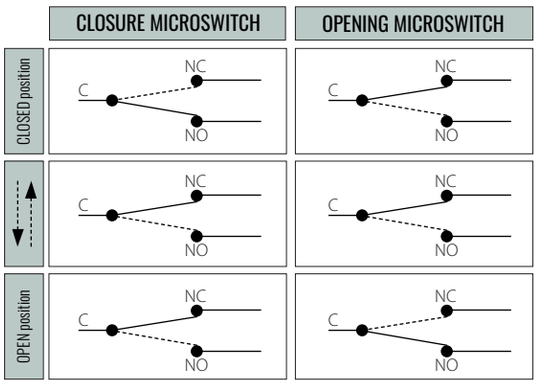

Technical specification

	ALL IN ONE - 2/3 points Vac	Proportional
Position indicator and manual override	Manual lever with arrow indicating the position of the ball	
Power supply	230 V - 50 Hz	230 Vac - 50/60 Hz
	110 V - 50 Hz	24V Vdc / Vac ± 10% 50/60 Hz
	24 V - 50Hz	
	230 V - 60 Hz	
	110 V - 60 Hz	
	24 V - 60 Hz	
Electric connections	Via terminal board inside the actuator	
Operating time (90°)	55 sec @ 50Hz Vac	30 sec
	45 sec @ 60Hz Vac	
Absorbed power	24 VA (Vac)	25 W
Maximum current on the output phase at terminals 4 and 5	1 A resistive	-
Maximum current supported by the additional microswitches	1 A resistive	max 30Vdc - 0,1 A resistive
Maximum noise (1 meter away)	50 dB (A) standard version	65 dB (A)
Operating ambient temperature	-10 °C ÷ +50°C (14°F ÷ 122°F)	
Degree of protection	IP 67 (Equivalent to NEMA6)	
Outer case	Characterized by a ribbed shape made of glass-filled "polyarylamide" technopolymer, particularly robust and impermeable to humidity	
Certification	CE	

Super capacitors electronic Fail Safe actuators

Using the SuperCaps technology the CT2, CT3 and CT4 actuators can store the necessary energy to drive open or close the valve in a safety position during an electrical power supply interruption. Fail safe open or close position in valves is crucial to prevent serious damages in critical applications such as coils freezing or steam exchangers overpressure. By default they are all provided with a 2-10 Vdc feedback, two auxiliary switches and 1m cable lenght.

Ordering Codes

Code	Torque (Nm)	Power supply
CT2FCM2Fx	11	24Vdc - 24V 50/60 Hz
CT2GCM2Fx	11	100...240V 50/60 Hz
CT3FCM2Fx	22	24Vdc - 24V 50/60 Hz
CT3GCM2Fx	22	100...240V 50/60 Hz
CT4FCM2Fx	40	24Vdc - 24V 50/60 Hz
CT4GCM2Fx	40	100...240V 50/60 Hz

Note: X=O for Fail safe valve open; C for Fail Safe valve close X

Technical specification - Fail safe Models

	CT2	CT3	CT4
Available power supply	24Vdc - 24V 50/60 Hz - 100...240V 50/60Hz		
Max. Running power consumption	10W	25W	25W
Power supply cable	1 m (40 in.) length AWG20		
Signal cable	1 m (40 in.) length AWG24		
Auxiliary switches rating	max 30V DC - 0.1 A	max 30V DC - 0.1 A	max 30V DC - 0.1 A
Nominal Torque	11 Nm	22 Nm	40 Nm
Available control type	On/off 3&2 points - proportional		
Valve position feedback	2 -10V DC		
Manual Override	Manual lever with arrow indicating the position of the sphere		
Running Speed (90°)	30s		
Fail safe speed(90°)	20 s	26 s	30 s
Max Noise	45 dB (A)	60 dB (A)	65 dB (A)
Degree of protection	IP67		
SuperCaps recharging time	15 min (90°)	15 min (90°)	50 min (90°)
Operating ambient temperature	-10°C ÷ 50°C (14°F ÷ 122°F)		
Certification	CE		

Wiring diagrams

On/Off models

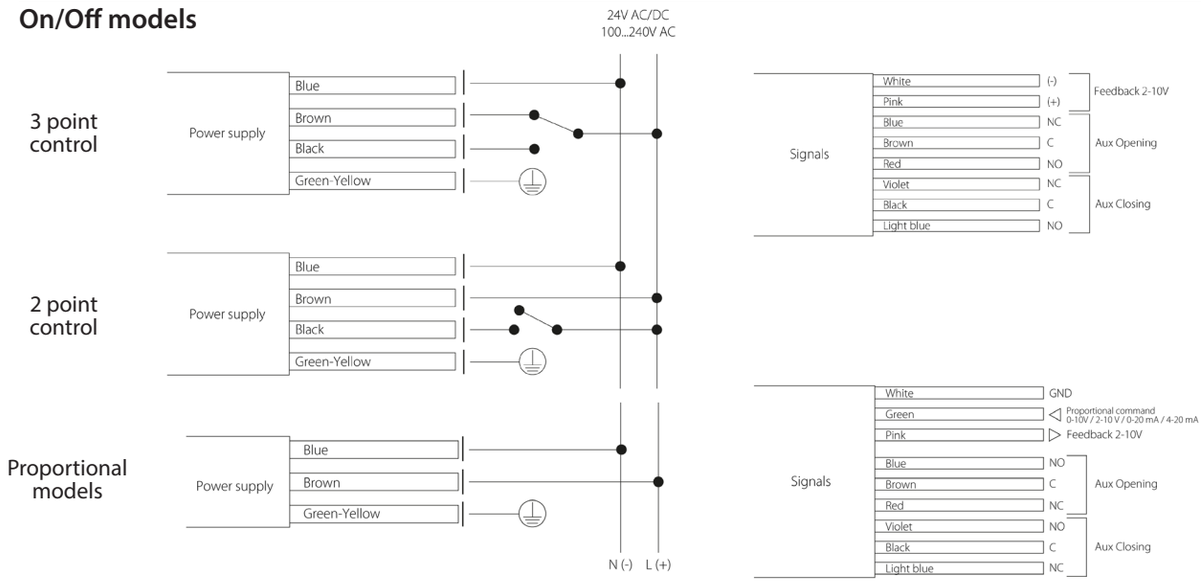

Valves combination

s.64 Low Torque	code	size	ΔP	CT1 - 8Nm	CT2 - 11Nm	CT3 - 22Nm	CT4 - 40Nm
	S64FxxA	1"	0 ÷ 6 Bar (0 ÷ 87 PSI)	•	•		
	S64GxxA	1 ¼"		•	•		
	S64HxxA	1 ½"		•	•		
	S64IxxA	2"		•	•		
	code	**size**	**ΔP**	**CT1 - 8Nm**	**CT2 - 11Nm**	**CT3 - 22Nm**	**CT4 - 40Nm**
	S64FxxA	1"	6 ÷ 16 Bar (87 ÷ 232 PSI)	•	•		
	S64GxxA	1 ¼"		•	•		
	S64HxxA	1 ½"		•	•		
	S64IxxA	2"			•		

s.64	code	size	ΔP	CT1 - 8Nm	CT2 - 11Nm	CT3 - 22Nm	CT4 - 40Nm
	S64Dxx	1/2"	0 ÷ 15 Bar (0 ÷ 217PSI)	•	•		
	S64Exx	3/4"		•	•		
	S64Fxx	1"		•	•		
	S64Gxx	1 ¼"			•		
	S64Hxx	1 ½"					•
	S64Ixx	2"					•
	code	**size**	**ΔP**	**CT1 - 8Nm**	**CT2 - 11Nm**	**CT3 - 22Nm**	**CT4 - 40Nm**
	S64Dxx	1/2"	15 ÷ 40 Bar (217 ÷ 580 PSI)	•	•		
	S64Exx	3/4"		•	•		
	S64Fxx	1"		•	•		
	S64Gxx	1 ¼"				•	
	S64Hxx	1 ½"					•
	S64Ixx	2"					•

s.65	code	size	ΔP	CT1 - 8Nm	CT2 - 11Nm	CT3 - 22Nm	CT4 - 40Nm
	S65Dxx	1/2"	0 ÷ 16 Bar (0 ÷ 232 PSI)	•	•		
	S65Exx	3/4"		•	•		
	S65Fxx	1"		•	•		
	S65Gxx	1 ¼"		•	•		

s.134	code	size	ΔP	CT1 - 8Nm	CT2 - 11Nm	CT3 - 22Nm	CT4 - 40Nm
	134Dxx	1/2"	0 ÷ 14 Bar (0 ÷ 203 PSI)	•	•		
	134Exx	3/4"		•	•		
	134Fxx	1"				•	
	134Gxx	1 ¼"				•	
	134Hxx	1 ½"					•
	134Ixx	2"					•

s.73 & s.76	code	size	ΔP	CT1 - 8Nm	CT2 - 11Nm	CT3 - 22Nm	CT4 - 40Nm
	S73Dxx	1/2"	0 ÷ 16 Bar (0 ÷ 232 PSI)		•	•	
	S73Exx	3/4"				•	
	S73Fxx	1"				•	
	S73Gxx	1 ¼"					•
	S73Hxx	1 ½"					•
	S73Ixx	2"					•
	code	**size**	**ΔP**	**CT1 - 8Nm**	**CT2 - 11Nm**	**CT3 - 22Nm**	**CT4 - 40Nm**
	S76Dxx	1/2"	0 ÷ 16 Bar (0 ÷ 232 PSI)	•	•	•	
	S76Exx	3/4"		•	•	•	
	S76Fxx	1"		•	•	•	
	S76Gxx	1 ¼"				•	
	S76Hxx	1 ½"				•	
	S76Ixx	2"					•

For complete disclaimer: www.rubvalves.com/disclaimer